www.DataSheet4U.com

BOLYMIN

BL128128A

Feature

1. OLED Display 128 x 128 dots
2. Built-in Controller SSD1339U3
3. +3.3V single power supply
4. 1/128 duty
5. Option: positive voltage for LCD
6. Color: RGB 262k color

Mechanical Data

Item	Standard Value	Unit
Module Dimension	46.5 x 38.0	mm
Viewing Area	26.86 x 26.86	mm
Dot Size	0.18 x 0.19	mm

Pin Assignment

Pin	Symbol	Function
1	Vss	GND
2	Vdd	+3.3V
3	CS	Chip select
4	/RES	Reset signal
5	RS	H:Data L:Command
6	WR	Write enable
7	RD	Read enable
8~15	DB0~DB7	Data bus
16	NC/VO	No connection/Power control

Electronic Characteristics

Item	Symbol	Condition	Typical Value	Unit
Input Voltage	Vdd	Vdd=3.3V	3.3	V
Supply Current	Idd	Vdd=3.3V	120	mA
Lift Time		40 cd/m^2	7000	hrs

Dimension

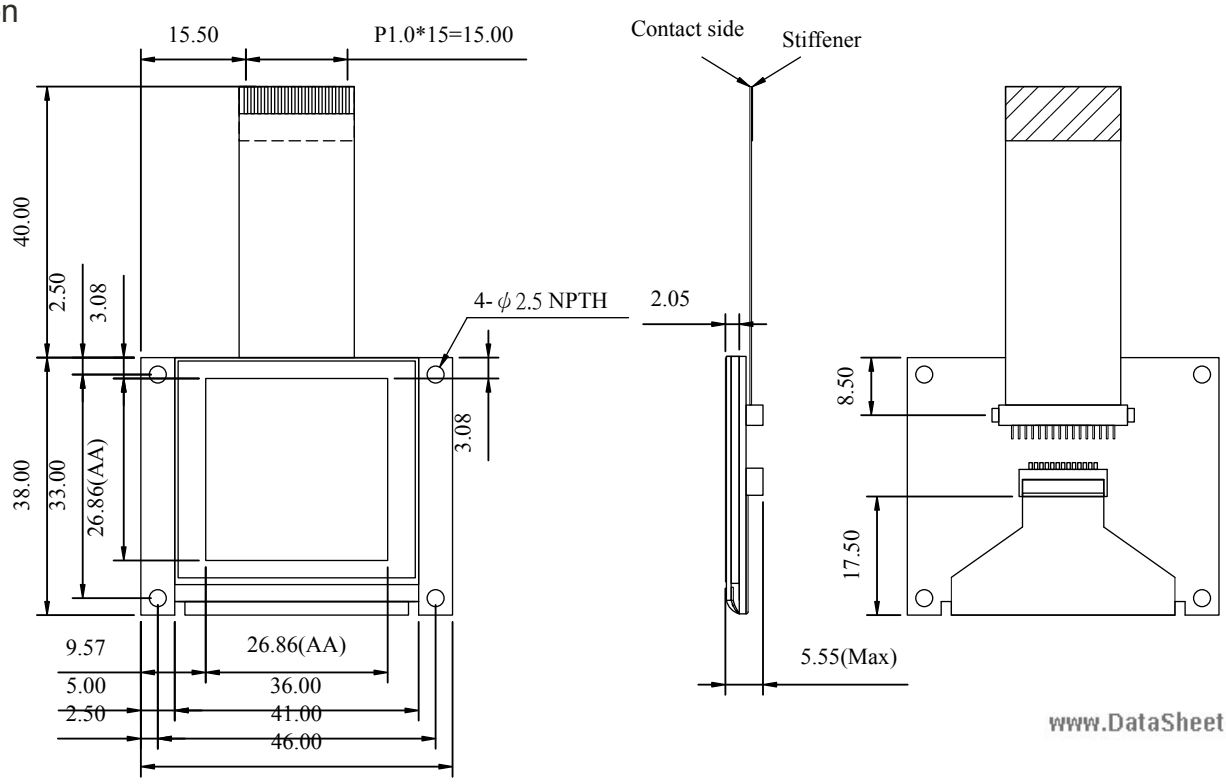

www.DataSheet4U.com